23182

Assembly Instruction

①X1	②X2	③X1	A X8	B X12	C X1	D X4	E X2
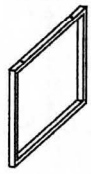	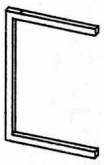	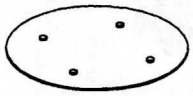					

1

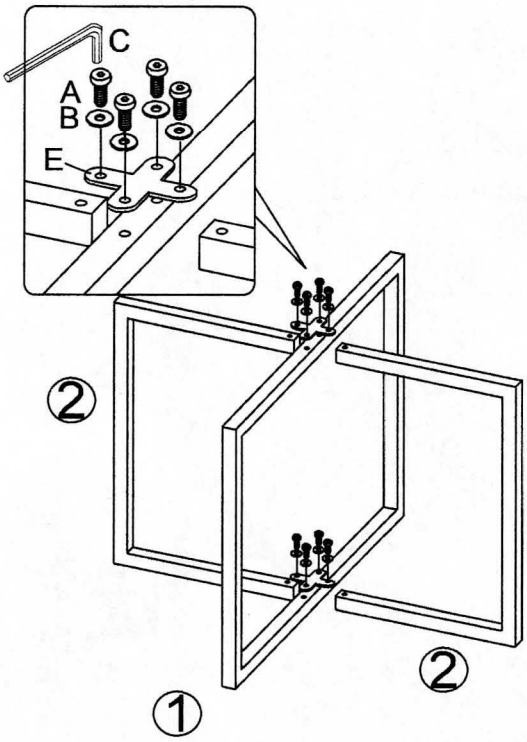

2

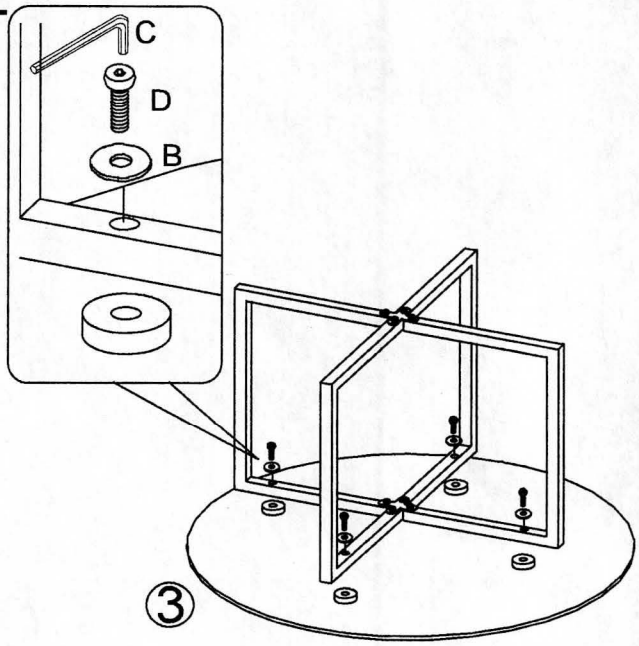
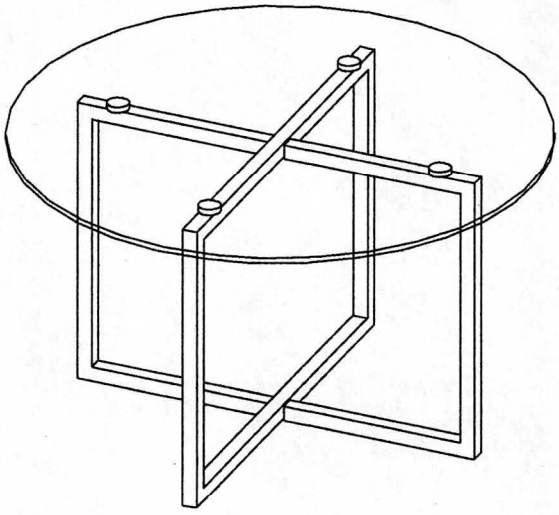
3